SM Journal of Family Medicine ISSN: 2576-0262

Review Article

© Golstein MA et al., 2026

FFibromyalgia: Why not Another Aetiological Approach?

Marc Alexandre Golstein*

Clinique Saint-Jean, Brussels, Belgium

Abstract

Fibromyalgia and diffuse pain disorders have been the subject of thousands of specialised publications and more than 56,000,000 references suggested by public search engines. Nevertheless, the aetiology of diffuse pain syndrome remains poorly understood, though it accounts for nearly 20% of rheumatology consultations. Treatment is not very systematised, and the results of treatment procedures remain of limited efficacy in terms of work capacity. The socio-economic consequences for patients with fibromyalgia are on the same level as those seen in patients diagnosed with rheumatoid arthritis. It would appear desirable to review the aetiological approach to be able to treat diffuse pain disorders more effectively. The association between violence experienced during childhood and the onset of fibromyalgia has been previously suggested without being considered a necessary and sufficient cause. However, thanks to the development of medical brain imaging techniques and the knowledge of epigenetic mechanisms, it seems that a previous history of sexual abuse and physical violence experienced during childhood could effectively be one of/or the cause of the onset of fibromyalgia.

Keywords: Fibromyalgia; Sexual Abuse; Etiology

INTRODUCTION

Since 1944, rheumatologists have published classification criteria about fibromyalgia successively in 1990, and 2010 by the American College of Rheumatology (ACR) [1,2], and slightly modified by the AAPT expert group [3] (2019). Despite the various classifications mentioned and 80 years of thousands of publications, little progress has been made in characterizing the fibromyalgia syndrome. Discussion of the difference between diffuse and multisite pain seems far removed from the concerns of fibromyalgia patients (Table 1). Given this stagnation, another aetiological approach could be considered, including sexual violence as one of the triggers. Pathologies linked to sexual abuse are little discussed in the rheumatological literature, and more particularly in the context of fibromyalgia [4,5]. Despite recent innovative approaches, most of the critical arguments are based on the absence of controlled prospective studies, methodological biases linked to the anamnestic history of the victims, and the similar frequency of sexual abuse in patients with established inflammatory rheumatism. However, advances in epigenetic mechanisms and functional brain imaging are opening new areas of understanding. Psychiatric publications are well ahead of their time on this subject, which receives very little attention in terms of the number of publications in rheumatological journals, whereas pathologies involving unexplained and/or chronic pain are more common.

The General Environment

The diversity of genders improves the quality of the drafting of scientific articles. Many clinical studies do not consider the specific characteristics of gender in the analysis of the effects of medicines. In addition, most publications were written by men. The effect of gender could partly explain why the topic of sexual abuse in inflammatory or non-inflammatory rheumatological diseases has garnered so little attention till the 21st century [6].

Recent cost-effective analyses about fibromyalgia are rare and only a few meta-analyses are available without answering to the efficacy of any treatment [7,8] . None of the studies can precisely determine which therapeutic strategies enable the patient to resume full-time or part-time work after having been incapacitated due to fibromyalgia. Nevertheless, the medico-social problem remains unresolved but leads to ever-increasing direct or indirect expenses in terms of healthcare. Full-time or part-time work incapacity touches 64% of patients [9]. To reduce rising costs and work incapacity, a multidisciplinary treatment approach with social and educational support has been proposed [10]. Unfortunately, this type of approach does not currently make it possible to control costs, which calls into question the effectiveness of current treatment methods given the poor results in terms of recovery and ability to work.

Could Childhood Maltreatment and Sexual Abuse be a Trigger of Fibromyalgia?

Considering the poor efficacy and efficiency of multiple therapeutic processes, it seems reasonable to reconsider childhood maltreatment as one of the starting points causing sleep disturbance, fatigue, widespread pain, multiple site pain, anxiety, depression, and/or fibromyalgia. After a certain latency period, people who have suffered maltreatment could develop pain syndrome more often than those who have not suffered this type of trauma [11]. Furthermore, the frequency of physical violence or sexual abuse is very high, reaching a prevalence of 62% among patients with fibromyalgia [12]. Childhood maltreatment is not the only source of this type of disorder. Episodes of physical or verbal violence during adulthood and socio-economic precarity, are both commonly related causes. This might, therefore, explain the significant number of patients with multiple pain disorders. In addition, an in vivo study demonstrates that anxiety or social instability is transmitted beyond three generations by female mice, independently of genetic heritage [13]. These findings seem to apply to human models. Childhood maltreatment, through epigenetic modification of the glucocorticoid receptor gene (NR3C1), influences the hypothalamic–pituitary–adrenal axis suggesting that this mechanism may lead to adulthood psychopathology [14], and transmission of parental post-traumatic stress disorder (PTSD) to offspring might be explained by transmission of the same epigenetic processes [15]. Intra-familial violence and sexual abuse may also mimic a familial or genetic pattern of fibromyalgia [16]. Recently, two studies

Submitted: 10 Aug, 2026 | **Accepted:** 07 Oct, 2026 | **Published:** 08 Oct, 2026

***Corresponding author:** Marc Alexandre Golstein, Clinique Saint-Jean, Brussels, Belgium

Copyright: ©2026 Golstein MA et al., This is an open-access article distributed under the terms of the Creative Commons Attribution License, which permits unrestricted use, distribution, and reproduction in any medium, provided the original author and source are credited.

Citation: Golstein MA. (2026) Fibromyalgia: Why not Another Aetiological Approach?. SM J Fam Med 4(1)-4.

[17,18], have reported an association between a history of sexual abuse and the onset of chronic pain conditions such as fibromyalgia. When we compile all these data, we gain a better understanding of the reasons for the absence of convincing therapeutic results. This also supports the idea of the need to treat this disorder differently, as it can probably be transmitted not only genetically but by the transgenerational repetition of physical and verbal abuse. Despite enormous amounts delivered to the care and treatment of fibromyalgia, the excessively low percentage of cured patients should lead us to consider other pathogenic explanations that are unfortunately darker than a genetic predisposition or a possible infectious agent. The multiplication of publications concerning childhood and adult maltreatment due to physical or verbal violence or sexual abuse is slowly revealing one of the deeper causes of these somatoform disorders, but probably also other observable pathologies. The hidden face of this fibromyalgia syndrome, which seems to be the human reflection of the violence encountered, or even generated, in our societies, should be approached fully and free of taboos.

Progress in the epigenetic and cerebral plasticity fields has opened new aetiological perspectives allowing us not only to explain the large number of patients suffering from fibromyalgia but also to consider an additional approach to explaining other observable organic pathologies. We know that nutrition influences gene expression and in 2002, an epidemiology study showed that the nutrition of the grandparents conditioned the predisposition of their descendants to developing cardiovascular and metabolic diseases (onset of diabetes mellitus), independently of genetic factors [19]. Since then, many articles have passed the preponderance of epigenetics on to genetics to explain the onset of pathology. Physical and mental trauma were then incriminated as a cause of fibromyalgia. Epigenetic changes were demonstrated in many genes coding for associated substances to chronic pain, depression, and post-traumatic stress disorder as well DNA methylation and up or down gene regulation associated with fibromyalgia patients [20,21]. Recently, post-traumatic stress disorder appears to be correlated to the emergence of auto-immune diseases empowering the role of a violent environment [22], on the occurrence of organic diseases.

The Neuronal Development and the Synaptic Plasticity

The study of the stages of neurogenesis reveals that at the age of 2 years, humans have the most possibilities for neuronal connections, and their learning and observation capacity is at its peak. Then, depending on learning and social conditioning, and therefore on the child's environment, the number of synapses decreases, as the learning reflexes and circuits for memorization and thought have been acquired. Recent brain imaging techniques have enabled us to evaluate the number of synaptic connections and cerebral volume with extreme precision. The cerebral consequences of psychological trauma or maltreatment and sexual abuse during childhood have been observed [23]. Significant morphological changes have thus been observed in several brain regions, resulting from the trauma experienced and the adaptation process. People who have suffered various episodes of maltreatment during their childhood develop changes, including in the volume of the grey matter, the frontal-occipital cortex, and the parietal gyrus. These objective deficiencies also appear to be correlated with the severity of the maltreatment [24]. Recent studies objective specific brain MRI imaging changes on hippocampal and amygdala subregions related to sexual abuse in case of depression disorder [25]. MRI imaging also supports childhood sexual abuse's implication on the onset of an adult post-traumatic stress disorder [26]. The hypothesis of sexual abuse during childhood as an etiological factor of fibromyalgia is slowly taking an objective form.

DISCUSSION AND PROPOSAL OF AN ETIOLOGICAL MECHANISM

Despite successive modified classification criteria (Figure 1), and the abundant literature, deficiencies in the treatment of patients with fibromyalgia are observed. The most recent meta-analyses reveal the heterogenicity of the studies and the low long-term impact of the various treatments on the disease itself and on the ability of patients to return to work.

On the one hand, treatment for fibromyalgia is stagnating, while on the other, in recent years the veil has been lifted on violence against women. However, the pain felt by patients is expressed during medical or rheumatology consultations, while psychological suffering is discussed with psychiatrists. Indeed, the frequency of sexual abuse and childhood maltreatment is most often put forth, or even demonstrated, in the neuro-psychiatric fields and forensic science. There is an initial reasoning bias, which consists of sidestepping this cause based on the practically

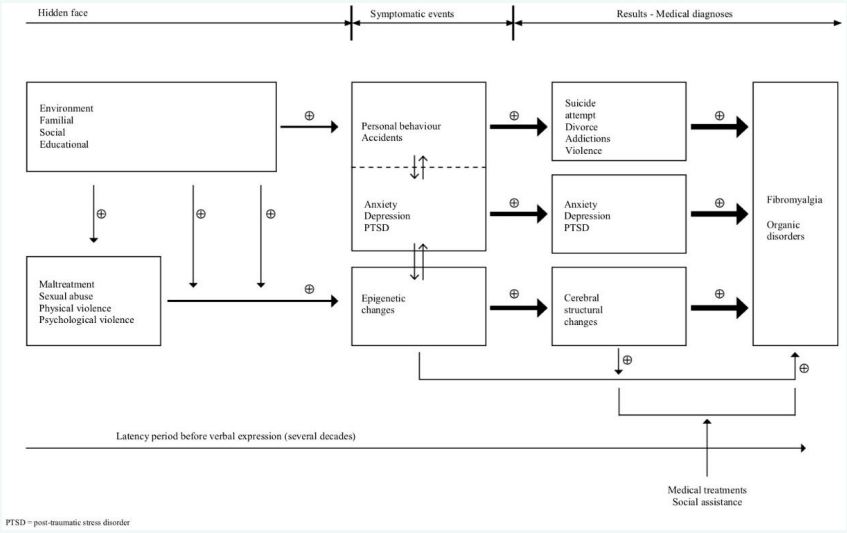

Figure 1: Hypothesis of the development of a diffuse pain syndrome

Table 1. Signs and symptoms of fibromyalgia according to Kelly (1944, 1945 and 1946) and according to the American College of Rheumatology (ACR 1990, 2010 and 2010 amended) and AAPT.

	Kelly 1944 to 1946	ACR 1990	ACR 2010	ACR 2010 amended	AAPT 2018
Duration	NM	3 months	3 months	3 months	3 months
Tender points / Widespread pain index (WPI)	+	> 11/18	> 7 and SS > 5; or WPI: 3 to 6 and SS > 9	> 13/31	>6 to 9 sites
Diffuse pain	NM	Mid-body left or right, under the waist and over the waist	+	+	+
Severity score (SS)	0	0	0	0	0
Sensitivity	0	88.4%	88.1%	NM	NM
Specificity	0	81.1%	88.1%	NM	NM
Cognitive disorders	+	0	+	+	+
Fatigue	0	0	+	+	+
Non-restful sleep (0-3)	0	0	+	+	+
Somatic disorders	+	0	+	+	+
Absence of other pathologies	+	+	+	+	+

Ref. 1-3: ACR Fibromyalgia guidelines (https://www.rheumatology.org/I-Am-A/Patient-Caregiver/Diseases-Conditions/Fibromyalgia).

Abbreviations: NM: Not Mentioned; SS: Severity Score; 0: not taken into consideration; +: taken into consideration.

equivalent frequency of a history of sexual abuse in patients with fibromyalgia and in the control group, which also includes inflammatory rheumatism; this implicitly sidesteps, without proof, the possibility that epigenetic changes caused by sexual abuse could also lead to a pro-inflammatory imbalance in predisposed subjects. The other reasoning bias is to require prospective longitudinal studies by comparing the outcomes of sexually abused children and "healthy controls". This requirement is simply impossible to meet, as it would involve including mistreated and abused children, who, based on a randomization process, would have to be either left in contact with abusers or cared for in a specialized structure, and then compared with a control group. In addition, the latency period between the time of the sexual abuse and the verbal expression of the victim is a major obstacle to the comparison of groups or observational studies. For more than 20 years, rheumatologists have adapted their diagnostic criteria (ACR 1990, 2010, 2010, AAPT 2018) considering the pain to be treated, without providing further therapeutic results. The recent data make it possible to observe epigenetic transcriptions of mediators and neurotransmitters involved in the processes of pain, depression, post-traumatic stress disorder, and synaptic connections in patients with fibromyalgia. Medical imaging shows the presence of brain lesions related to fibromyalgia and childhood maltreatment. There is still no indubitable demonstration of the correlation between fibromyalgia and/or somatoform disorders, the epigenetic expression of substances involved in synaptic plasticity and cerebral morphological modification, but it is getting closer [26,27]. However, the epigenetic arguments appear to converge towards an etiological hypothesis combining the current knowledge. All that remains to demonstrate a correlation between cerebral morphological and biochemical changes, to encounter a better approach to fibromyalgia's etiology.

CONCLUSION

For almost 80 years, billions of euros and dollars have been spent and thousands of publications have been written on the subject without satisfactory patient results. The administration of drugs remains the first choice of treatment in rheumatology consultations, the emergence of knowledge in epigenetics and functional imaging offers new perspectives for understanding the appearance of diffuse pain in the context of violent acts and sexual abuse. This approach could provide missing knowledge needed to improve the management of fibromyalgia.

REFERENCES

1. Kelly M. Fibrositis and Reality. Ann Rheum Dis. 1944; 4: 46-9.
2. Wolfe F, Clauw DJ, Fitzcharles MA, Goldenberg DL, Katz RS, Mease P, et al. The American College of Rheumatology preliminary diagnostic criteria for fibromyalgia and measurement of symptom severity. Arthritis Care Res (Hoboken). 2010; 62: 600-610.
3. Arnold LM, Bennett RM, Crofford LJ, Dean LE, Clauw DJ, Goldenberg DL, et al. AAPT Diagnostic Criteria for Fibromyalgia. J Pain. 2019; 20: 611-628.
4. Hudson JI, Pope HG Jr. Does childhood sexual abuse cause fibromyalgia? Arthritis Rheum. 1995; 38: 161-163.
5. Boisset-Pioro MH, Esdaile JM, Fitzcharles MA. Sexual and physical abuse in women with fibromyalgia syndrome. Arthritis Rheum. 1995; 38: 235-241.
6. Nielsen MW, Alegria S, Börjeson L, Etzkowitz H, Falk-Krzesinski HJ, Joshi A, et al. Opinion: Gender diversity leads to better science. Proc Natl Acad Sci U S A. 2017; 114: 1740-1742.
7. Annemans L, Wessely S, Spaepen E, Caekelbergh K, Caubère JP, Le Lay K, et al. Health economic consequences related to the diagnosis of fibromyalgia syndrome. Arthritis Rheum. 2008; 58: 895-902.
8. Reisine S, Fifield J, Walsh S, Forrest DD. Employment and health status changes among women with fibromyalgia: a five-year study. Arthritis Rheum. 2008; 59: 1735-1741.
9. Wolfe F, Anderson J, Harkness D, Bennett RM, Caro XJ, Goldenberg DL, et al. Work and disability status of persons with fibromyalgia. J Rheumatol. 1997; 24: 1171-1178.
10. Arfuch VM, Aguilar Martín C, Berenguera A, Caballol Angelats R, Carrasco-Querol N, González Serra G, et al. Cost-utility analysis of a multicomponent intervention for fibromyalgia syndrome in primary

care versus usual clinical practice: study protocol for an economic evaluation of a randomised control trial. BMJ Open. 2021; 11: e043562.

11. Gardoki-Souto I, Redolar-Ripoll D, Fontana M, Hogg B, Castro MJ, Blanch JM, et al. Prevalence and Characterization of Psychological Trauma in Patients with Fibromyalgia: A Cross-Sectional Study. Pain Res Manag. 2022; 2022: 2114451.

12. Häuser W, Kosseva M, Üceyler N, Klose P, Sommer C. Emotional, physical, and sexual abuse in fibromyalgia syndrome: a systematic review with meta-analysis. Arthritis Care Res (Hoboken). 2011; 63: 808-820.

13. Saavedra-Rodríguez L, Feig LA. Chronic social instability induces anxiety and defective social interactions across generations. Biol Psychiatry. 2013; 73: 44-53.

14. Perroud N, Paoloni-Giacobino A, Prada P, Olié E, Salzmann A, Nicastro R, et al. Increased methylation of glucocorticoid receptor gene (NR3C1) in adults with a history of childhood maltreatment: a link with the severity and type of trauma. Transl Psychiatry. 2011; 1: e59.

15. Perroud N, Rutembesa E, Paoloni-Giacobino A, Mutabaruka J, Mutesa L, Stenz L, et al. The Tutsi genocide and transgenerational transmission of maternal stress: epigenetics and biology of the HPA axis. World J Biol Psychiatry. 2014; 15: 334-345.

16. Golstein MA, Steinfeld SD. Non-genetic familial transmission of fibromyalgia: role of sexual abuse? Clin Exp Rheumatol. 2022; 40: 1221-1222.

17. Jacobsen SA, Petersen MW, Wellnitz KB, Ørnbøl E, Dantoft TM, Jørgensen T, McLean SA, Frostholm L, Carstensen TBW. Functional Somatic Disorders in Individuals with a History of Sexual Assault. JAMA Psychiatry. 2026; 83: 23-31.

18. Summit AG, Lin HC, Wisner KM, Chen C, Pettersson E, Boersma K, D'Onofrio BM, Lichtenstein P, Quinn PD. Assessing the association between child maltreatment and chronic pain: a cross-sectional co-twin control study. Pain. 2026; 167: 387-395.

19. Kaati G, Bygren LO, Edvinsson S. Cardiovascular and diabetes mortality determined by nutrition during parents' and grandparents' slow growth period. Eur J Hum Genet. 2002; 10: 682-688.

20. Ovrom EA, Mostert KA, Khakhkhar S, McKee DP, Yang P, Her YF. A Comprehensive Review of the Genetic and Epigenetic Contributions to the Development of Fibromyalgia. Biomedicines. 2023; 11: 1119.

21. Menzies V, Lyon DE, Archer KJ, Zhou Q, Brumelle J, Jones KH, et al. Epigenetic alterations and an increased frequency of micronuclei in women with fibromyalgia. Nurs Res Pract. 2013; 2013: 795784.

22. Brite J, Miller-Archie SA, Cone J. The Relationship between 9/11 Exposure, Systemic Autoimmune Disease, and Post-Traumatic Stress Disorder: A Mediational Analysis. Int J Environ Res Public Health. 2022; 19: 6514.

23. Cassiers LLM, Sabbe BGC, Schmaal L, Veltman DJ, Penninx BWJH, Van Den Eede F. Structural and Functional Brain Abnormalities Associated With Exposure to Different Childhood Trauma Subtypes: A Systematic Review of Neuroimaging Findings. Front Psychiatry. 2018; 9: 329.

24. Luo Q, Chen J, Li Y, Wu Z, Lin X, Yao J, et al. Aberrant static and dynamic functional connectivity of amygdala subregions in patients with major depressive disorder and childhood maltreatment. Neuroimage Clin. 2022; 36: 103270.

25. Kim SY, An SJ, Han JH, Kang Y, Bae EB, Tae WS, et al. Childhood abuse and cortical gray matter volume in patients with major depressive disorder. Psychiatry Res. 2023; 319: 114990.

26. Harb F, Liuzzi MT, Huggins AA, Webb EK, Fitzgerald JM, Krukowski JL, et al. Childhood Maltreatment and Amygdala-Mediated Anxiety and Posttraumatic Stress Following Adult Trauma. Biol Psychiatry Glob Open Sci. 2024; 4: 100312.

27. Xu Y, Yang S, Cao C. Glucocorticoid receptor gene (NR3C1) methylation, childhood maltreatment, multilevel reward responsiveness and depressive and anxiety symptoms: A neuroimaging epigenetic study. Neuroimage. 2025; 306: 121003.